CLASSIC CAR COLORS

Glasurit

FARBCODELISTE

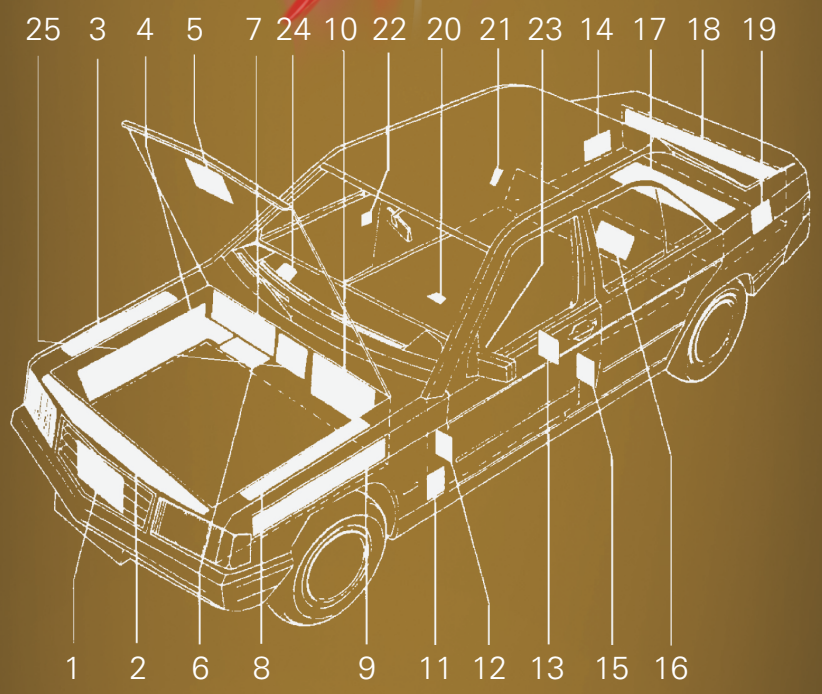

AIXAM	2									
ALFA ROMEO	5	8	14	17	18					
AUDI	14	17	18							
BMW	2	3	4	7	8					
CHRYSLER	2	4	5	8	9	10				
CITROEN	2	3	4	7	8	10				
DAEWOO	2	10								
DAF	7	10	12							
DAIHATSU	2	7	10	20	22					
FERRARI	3	5	18	19						
FIAT	4	5	14	18						
FORD EUROPA	2	3	4	7	8	10	15	17	18	22
FORD AMERIKA	15									
FSO	7	10								
GENERAL MOTORS	2	7	10	12	16	18	19	20	21	
HONDA	15	22								
HYUNDAI	2	7	10	15						
INNOCENTI	22									
ISUZU	2	7	10	13	15					
IVECO	5									
JAGUAR	2	4	5	11	15					
KIA	15	25								
LADA	4	5	8	17	18	19				
LAMBORGHINI	18									
LANCIA	2	4	5	7	18					
LAND ROVER	2	3	7	10	15	17				
LEXUS	3	7	10	15						
LOTUS	3	8	10							

MASERATI	5									
MAZDA	7	10	15	22						
MERCEDES BENZ	2	3	8	10	12	15	24			
MITSUBISHI	2	3	4	5	7	8	15			
MOSKVITCH	7	14								
NISSAN	2	4	7	10						
OPEL	2	3	4	7	8	10				
PEUGEOT	2	3	8							
PORSCHE	2	7	8	10	12	15				
PROTON	2	7	10							
RELIANT	3	4	7	9	10					
RENAULT	3	7	8	10	15					
ROLLS ROYCE	3	5	10							
ROVER	2	3	5	7	10	15				
SAAB	3	8	10	15	17					
SSANGYONG	12	15								
SEAT	3	8	17	18						
SKODA	8	10	17							
SUBARU	2	7	8	10	11	15				
SUZUKI	7	10	11	17	20	23	24			
TALBOT	2	3	4	7	8	9				
TOYOTA	2	3	4	7	8	9	10	12	15	25
UMM	4									
VAUXHALL	2	8	9	10						
VOLKSWAGEN	1	2	3	7	8	14	17	18	19	
VOLVO	2	3	7	8	9	10	11	12	15	
YUGO	2	3	5	18						